MULTITERIA

Beyond the Standard

X-STREAMLINE™

Slide-Top Milk Case Dispenser

Date: _____ Quantity: _____

Item #: _____

Project: _____

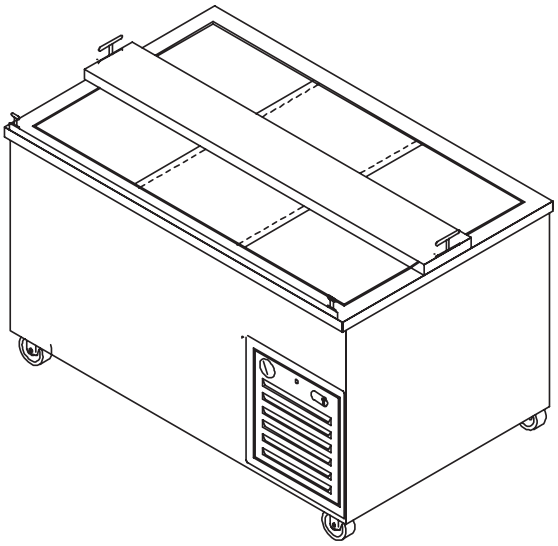

Models

- ❑ *STMDX-38*
- ❑ *STMDX-56*
- ❑ *STMDX-75*

- ➤ ***3 standard sizes available***
- ➤ Heavy duty, 14 gauge stainless steel countertops standard
- ➤ Interchangeable front panels create decorative interaction stations.
- ➤ Accommodates standard 13x13 milk crates reducing service handling
- ➤ 5″ heavy duty casters with brakes standard
- ➤ 8′-0″ cord and plug (standard)

Options & Accessories

Counter Front

- ☐ Counter front graphics (standard) please specify
  See graphic chart
  - ☐ Option 1: Spice Spot
  - ☐ Option 2: Hot Spot
  - ☐ Option 3: Refuel Station
  - ☐ Option 4: Grill n′ Chill
  - ☐ Option 5: Wrap-n-Roll
  - ☐ Option 6: Chillin′ Zone
  - ☐ Option 7: Field of Greens
  - ☐ Option 8: Deli Xpress
  - ☐ Option 9: Taco Island
  - ☐ Option 10: Xpressly Pizza
  - ☐ Option 11: Stainless steel panel
  - ☐ Option 12: Custom Graphic (consult factory)

Color Palette

- ☐ Counter front color palette please specify: _____
  - ☐ Palette 1: Blue Green
  - ☐ Palette 2: Orange Red
  - ☐ Palette 3: Pink Purple
  - ☐ Palette 4: Green Yellow
  - ☐ Palette 5: Other _____

Tray Slide

- ☐ 12″ Stainless steel "V" ridge tray slide (standard)
- ☐ 12″ Flat stainless steel tray slide
- ☐ Solid surface tray slide

  Specify: _____

Options

- ☐ Laminated exterior body panels
- ☐ Lid locking device
- ☐ Fold-down shelf
  -rear mounted
  -side mounted
- ☐ Daisy chain for wiring multiple units together
- ☐ Wraparound bumper
- ☐ Flush mounted duplex outlet
- ☐ Pedestal mounted duplex outlet
- ☐ Additional tray slide for dual service

c UL us LISTED

CLASSIFIED UL EPH

MULTITERIA • 100 TRI-STATE INTERNATIONAL OFFICE CENTER, SUITE 215 • LINCOLNSHIRE, IL 60069
TEL: 847-236-9677 • FAX: 847-236-9674 • WWW.MULTITERIAUSA.COM

MULTITERIA

Beyond the Standard

X-STREAMLINE™

Slide-Top Milk Case Dispenser

Item #: _____

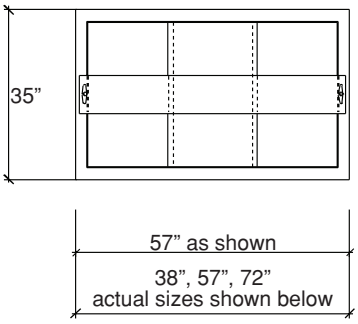

Plan View

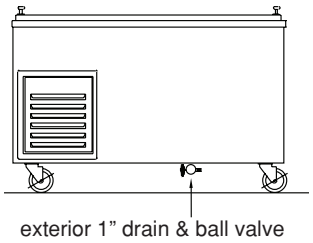

Front Elevation

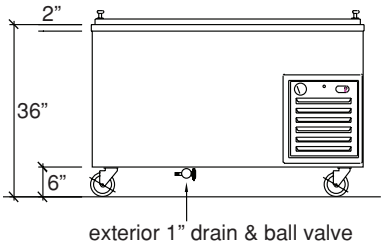

Rear Elevation

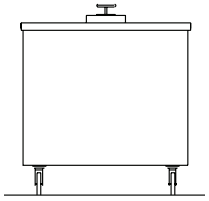

End View

Model	30” Width X Length	No. of Dairy Cases	Capacity using 1/2 pt cartons at 48 per case	Comp	120V, phase 1		Approx. weight
					AMPS	NEMA	
❑ STMDX-38	38”	6	288	1/4	5.0	5-15P	375 lbs
❑ STMDX-56	56 1/2”	10	480	1/4	5.0	5-15P	515 lbs
❑ STMDX-75	75”	14	672	1/3	7.1	5-15P	595 lbs

**Mechanical requirements may change depending on options chosen.

Specifications: Short Form
Provide Multiteria Model # _____ to be constructed with 14 gauge, heavy duty welded stainless steel top. Counter top to be manufactured with 14 gauge stainless steel square turndown on all sides and corners fully welded, ground and polished. The body to be 18 gauge stainless steel unitized construction with overlapping corners welded in place.

Specifications: Detailed
Counter body is a combination of angled frame and unitized type construction and is of 18 gauge stainless steel with overlapping corners welded in place. Body is reinforced with 12 gauge vertical galvanized steel channel supports.

Front décor panels:
Panels to be laminated vinyl with graphic print. Panels shall be colorful and interactive in design and shall be easily removable and replaceable allowing front service access. A stainless steel front panel is optional.

Counter Top and Lids:
Top to be 30” wide and fabricated from a minimum of 14 gauge stainless steel with square turndown on all sides and corners fully welded, ground and polished. Top to have #4 satin finish and all edges having #7 highlight finish. Interior top to turn down into opening and complete with integral ledges to support sliding lids. Lids shall be 18 gauge stainless steel double pan construction complete with stainless steel hand pulls. Cabinet lids are fully insulated with urethane insulation.

Refrigerated dispenser:
Refrigerated dispenser shall have fully welded steel exterior with a watertight interior liner of stainless steel fully insulated wit 1” brass drain extended below body to ball valve.

Refrigeration system:
An interior box temperature shall be maintained by a cold wall evaporator system with an accessible expansion valve. The condensing unit shall be a properly sized fully hermetic unit, R-22, with built in condensate evaporator with all necessary controls for proper operation.

Dispensing Mechanism:
The dispensing height of each milk crate shall be maintained at a constant level by two stainless steel lowerrator mechanisms, field adjustable without the use of tools, and a removable stainless steel carrier. Area above compressor shall not be self-leveling.

Casters:
Counter is mounted on 5” diameter, ball bearing and swivel type casters to be non-marking and with brakes on all wheels. Casters to be mounted through two 12 gauge channels for extra rigidity.

c UL us LISTED

CLASSIFIED UL EPH

Due to continuing product improvement, units and specifications are subject to change without notice. (3/2008)

MULTITERIA • 100 TRI-STATE INTERNATIONAL OFFICE CENTER, SUITE 215 • LINCOLNSHIRE, IL 60069
TEL: 847-236-9677 • FAX: 847-236-9674 • WWW.MULTITERIAUSA.COM